Ventilation Systems
Fan Filter
風扇過濾器
245-320m³/h

Characteristics:

1. It comprises of a axial fan, a protective housing on the front and rear surfaces and filter designed to retain dust particles.
2. The filters that equip the fans must be cleaned and replaced regularly.
3. This filter can be replaced during operation without risk of touch with the rotating part.
4. Material of filter pad: 100g/ M3 nylon fiber compound, Filtration efficiency up to 7 3%.
5. Operation Temperature/Humidity Range: (under unconcretionary state) -20℃ ~ +70℃ (temperature), 0% ~ 95% (himidity)
6. RAL 7035 grey is the standard offer with the possibility to change to RAL 7032 by means of a replacement grille.
7. Bear in mind the pressure losses caused by the outlet element (grille with filter, ventilation louvre or simple opening) when determining the fan flow rate.
8. Protection class: E N 60 5 29 I P 5 4 (not suitable for outdoor equipment).

特　點：

1. 由軸流風扇與前后保護外殼和阻擋粉塵的過濾面板組成。
2. 裝風扇的過濾面板必須定期清洗和更換。
3. 風扇運行時，可以對過濾面板進行更換，而不會有碰到風扇旋轉部分的危險。
4. 過濾墊材料：150g/ M3 尼龍纖維合成，過濾效率達7 3%
5. 運行溫/濕度範圍：（非凝結狀態）溫度 -20℃ ~ +70℃ 濕度 0% ~ 95%
6. 標準顏色為RAL7035灰色，可換成RAL7032，只需通過更換某柵。
7. 在計算風扇流量的時候謹記由外部因素導致的壓力損失（帶過濾面板的某柵，百葉窗形通風，或簡單的開口）。
8. 防護等級：E N 60 5 29 I P 5 4 （不適于戶外設備）。

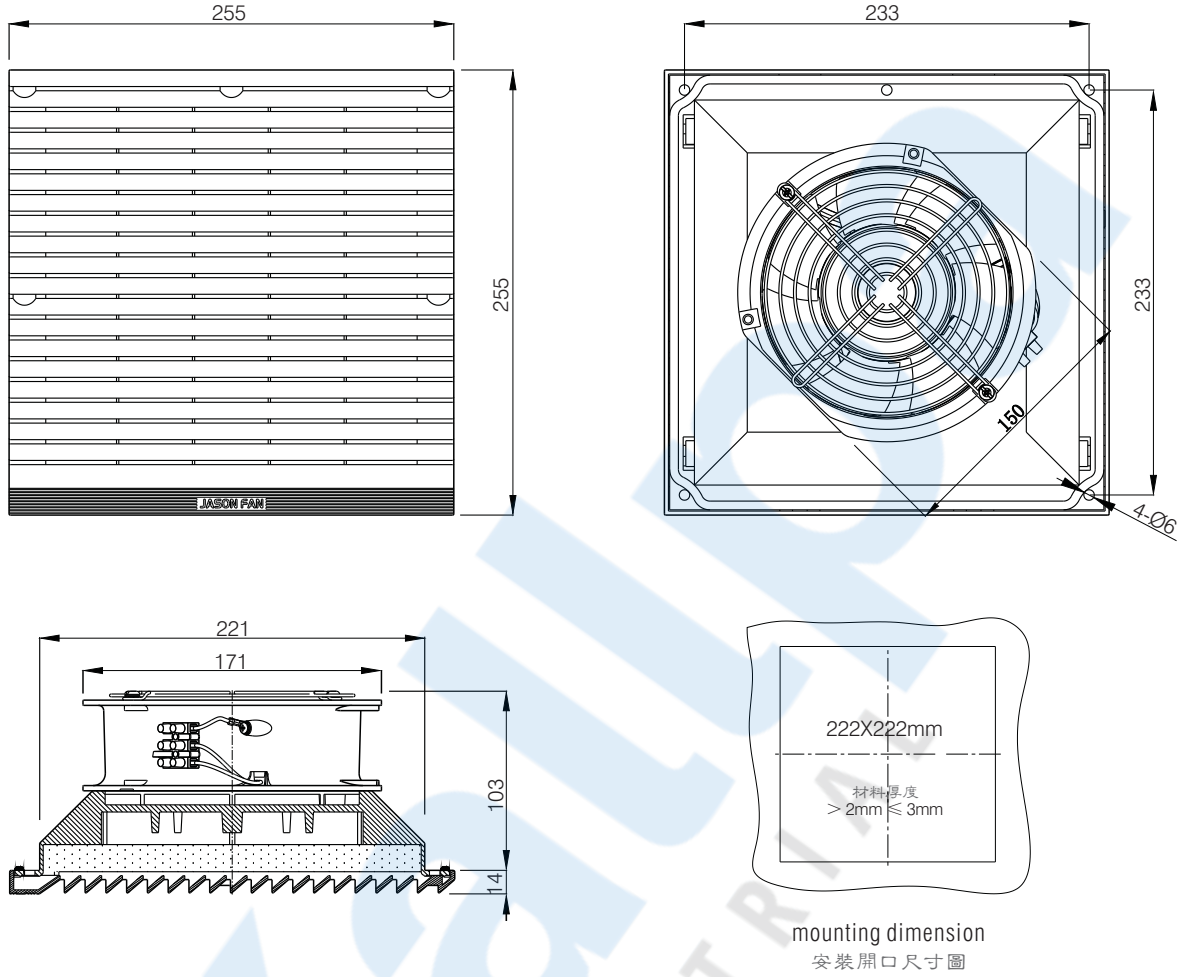

Outline Dimensions (Units:mm)

Ⓐ installation: Snap-in and screw installationn
Ⓑ Power connection: Terminal connection
Ⓒ With seal ring
Ⓓ Maximum weight: 1.45kg

Ⓐ 按裝方式：卡入式及螺絲按裝
Ⓑ 電源連接：端子連接
Ⓒ 帶有密封圈
Ⓓ 最大重量：1.45kg

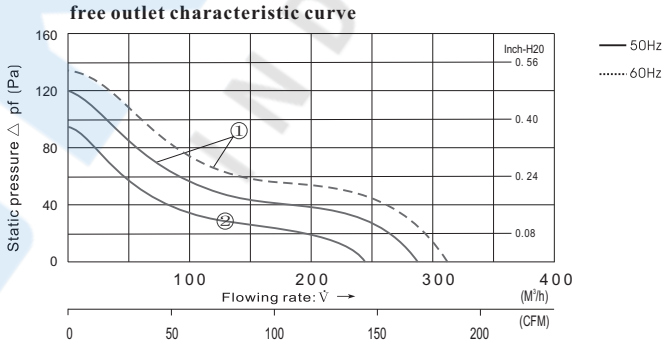

Parameters

Type 產品型號	Fan Model 風扇型號	Rated Voltage 額定電壓 V	Speed 電壓範圍 V	Frequency 周波數 Hz	current 電流 (A)	Power 功率 (W) +10% -20%	Max Air Flow 最大風量 m³/h	Static Pressure 最大靜壓 (Pa)	Noise 噪音 (dB)	Curve 曲綫	external dimensions 外形尺寸 (mm)
FJK6625PB115	FJ15051ABH	115 AC	75...125	50	0.48	41	280	120	48	①	255x255x117
				60	0.46	38	320	135	50		
FJK6625PB230	FJ15052ABH	230 AC	150...250	50	0.26	41	280	120	48	①	255x255x117
				60	0.24	38	320	135	50		
FJK6625PB12	FJ15050PB12	12 DC	8...15		1.05	12	245	95	48	②	255x255x117
FJK6625PB24	FJ15050PB24	24 DC	12...28		0.50	12	245	95	48		
FJK6625PB48	FJ15050PB48	48 DC	28...60		0.24	11.5	245	95	48		